Packing Quantity

Package	Manner of packing	Qty per inner tube	Qty per inner box	Qty per Carton
TO-220F	tube	50	1000	6000

Note 1: These are minimum package quantities only. Minimum orders will differ. Contact the factory for more information on minimum order quantities.

Note 2: GOFORD Tape&reel products meets EIA-481 REV D specification.

Device Tape orientation Start and Finish Specification

Package	Tube Orientation
TO-220F	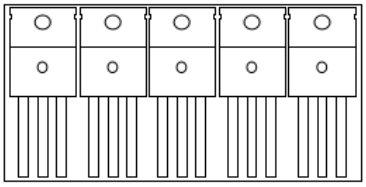

Dimensions

Tube Size

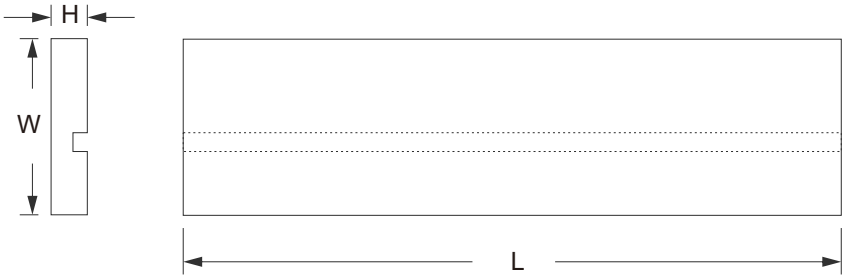

Description	Dimension	Specification(mmtypical)
Length	L	530±1.0
Width	W	33±0.1
Height	H	7±0.1

Inbox size

Description	Dimension	Specification(mmtypical)
Length	L	548
Width	W	110
Height	H	75

Carton size

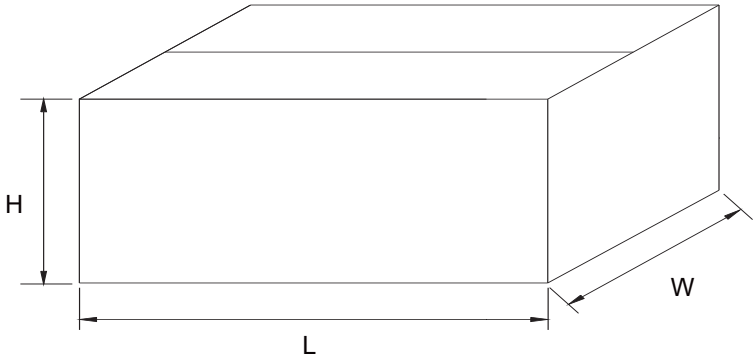

Description	Dimension	Specification(mmtypical)
Length	L	565
Width	W	255
Height	H	255

Packing Quantity

Package	Manner of packing	Qty per inner tube	Qty per inner box	Qty per Carton
TO-220F	tube	50	1000	5000

Note 1: These are minimum package quantities only. Minimum orders will differ. Contact the factory for more information on minimum order quantities.

Note 2: GOFORD Tape&reel products meets EIA-481 REV D specification.

Device Tape orientation Start and Finish Specification

Package	Tube Orientation
TO-220F	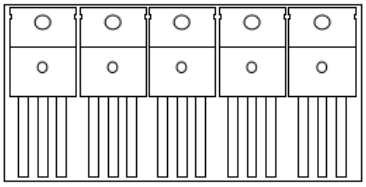

Dimensions

Tube Size

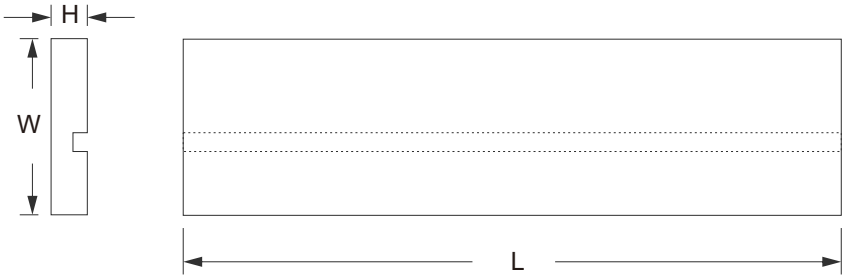

Description	Dimension	Specification(mmtypical)
Length	L	536±1.0
Width	W	33±0.2
Height	H	7±0.2

Inbox size

Description	Dimension	Specification(mmtypical)
Length	L	570
Width	W	164
Height	H	45

Carton size

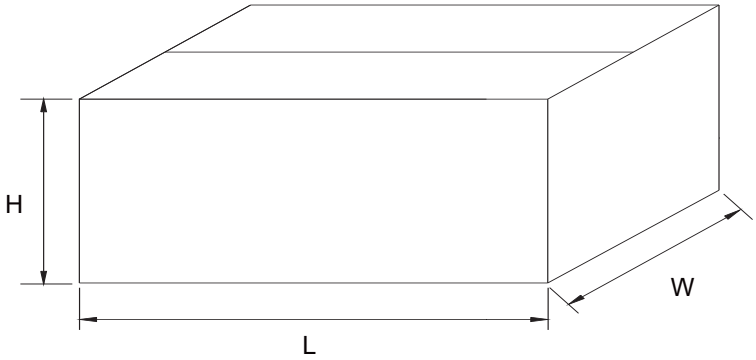

Description	Dimension	Specification(mmtypical)
Length	L	591
Width	W	248
Height	H	188

Packing Quantity

Package	Manner of packing	Qty per inner tube	Qty per inner box	Qty per Carton
TO-220F	tube	50	1000	5000

Note 1: These are minimum package quantities only. Minimum orders will differ. Contact the factory for more information on minimum order quantities.

Note 2: GOFORD Tape&reel products meets EIA-481 REV D specification.

Device Tape orientation Start and Finish Specification

Package	Tube Orientation
TO-220F	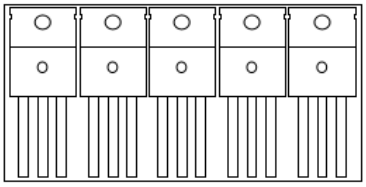

Dimensions

Tube Size

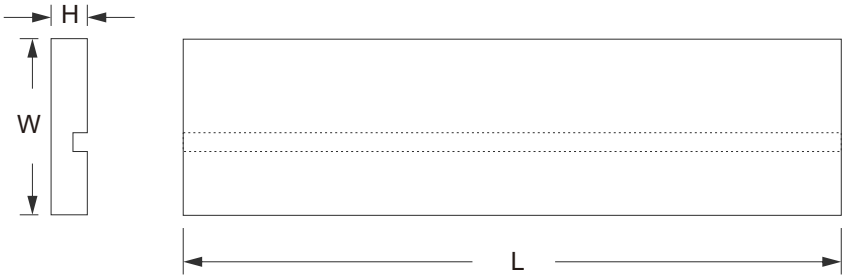

Description	Dimension	Specification(mmtypical)
Length	L	528
Width	W	33
Height	H	6.85

Inbox size

Description	Dimension	Specification(mmtypical)
Length	L	552
Width	W	156
Height	H	43

Carton size

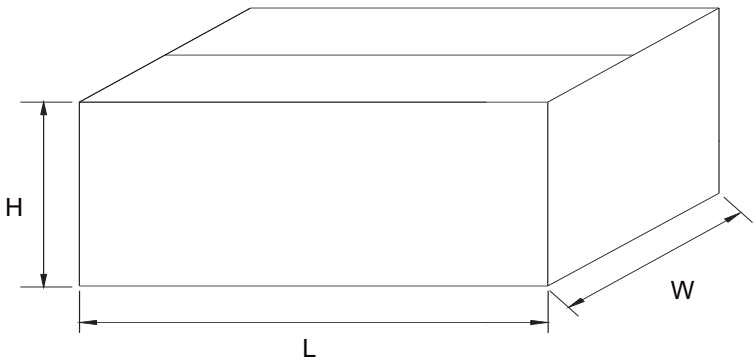

Description	Dimension	Specification(mmtypical)
Length	L	572
Width	W	240
Height	H	176